CloverVent

Air to Air Packaged Rooftop Unit

Cooling capacity from 12 to 298 kW
Heating capacity from 13.2 to 318 kW

Rooftop Packaged Unit

Outdoor and Roof Top installation

Functions

Cooling C&H Free Cooling

Characteristics

Structure

Panels and frame are made from metal steel protected with polyester powder painting to ensure total resistance to atmospheric agents.

Direct expansion coils with condensate drain tray.

Hermetic compressor

High efficiency scroll compressor for the whole range, with built-in thermal overload cut-out and crankcase heater, mounted on rubber vibration dampers.

Ripple type acoustic insulation for compressor section, and thermal insulation for coil and fan section, low noise.

Centrifugal fan

Forward curve centrifugal fans for air treatment section and axial fans for condensation section.

Front, side and underside air discharge of the treatment unit.

High external pressure, long air supply distance.

Electric panel

Electric panel consists of breakers and contactors for compressors and fan motors, phase sequence relay and other necessary protection devices for the main components.

Easy operation line controller:

Cooling/Heating//Auto

Error indication

Timing On/Off

Optional

Economizer with fresh, return air dampers and fresh air hood

Free cooling function for low ambient temperature.

Low ambient control device for operation of outdoor units at ambient temperatures from less than 20°C down to -10°C.

BMS devices

T3 (Tropical climate)

Condenser coil guard

Roof curb

Metal / aluminum filter

Air pressure switch for indoor fan

High static condenser fan option with sealed + drain condensing section

Optional water heating coil

Metal or plastic mesh on condenser coil

Optional supply / return air configurations

Upgraded evaporator fan motor drives.

G4 filter, plate and bag filter

NOMENCLATURE

RTU 10 H C P
① ② ③ ④ ⑤ ⑥

① **RTU**: Rooftop unit
② Model Number

③ **C**: **C**ooling only
H: **H**eat pump
④ Refrigerant type

D: R32
A: R410a
B: R134a
C: R407c

⑤ Type of unit
P: Packaged type
S: Split type

TECHNICAL DATA R410a

Model			RTU-12	RTU-16	RTU-18	RTU-24	RTU-30	RTU-36
Cooling capacity		kW	12	15.2	17.5	24	30.3	35.6
Heating capacity		kW	13.2	16.6	18.4	26.5	33.3	37.7
Energy control		%	0,100%			0,50,100%		
Power supply			380V / 3Ph / 50HZ					
Cooling power input		kW	4.1	5.3	5.5	8.8	11.3	12.3
Heating power input		kW	3.8	4.8	5.1	8.2	10.4	11.3
Start current		A	48	62	63	63	74	76
Working current in cooling		A	7.4	9.7	10.2	16.1	21.2	23.3
Working current in heating		A	6.9	9.2	9.7	15.1	20.1	22.2
Throttle methods			Thermal expansion valve					
Circuits			1	1	1	1	2	2
Refrigerant			R410a					
Comp.	Type		Scroll type					
	Qty		1	1	1	1	2	2
Condensor side								
Condensor	Type		Al+copper tube					
Axial fan	Qty		1	1	1	1	1	1
	Drive		Direct drive					
	Motor power	kW	0.25	0.37	0.37	0.55	0.75	0.75
	Air flow	m^3/h	4600	7800	7800	9000	12600	12600
Evaporator side								
Evaporator	Type		Al+copper tube					
Centrifugal fan	Qty		1	1	1	1	1	1
	Motor power	kW	0.32	0.37	0.45	1.1	1.5	2.2
	Air flow	m^3/h	2100	2600	3400	4100	5200	6300
	Drive		Direct drive			Belt drive		
External static pressure（Pa）			100	100	100	200	200	250
Filter			Aluminum frame filter G3					
Noise level dB(A)			67	67	68	71	72	72
Refrigerant charge（kg）			3.1	3.1	4.3	2x3.1	2x3.1	2x4.3
Dimension	L	mm	1410	1410	1410	1978	1978	1978
	W	mm	1100	1100	1100	1175	1175	1175
	H	mm	1095	1095	1095	1095	1095	1095
Weight		kg	240	260	290	420	480	500

TECHNICAL DATA R410a

Model			RTU-48	RTU-50	RTU-60	RTU-72	RTU-90	RTU-105
Cooling capacity		kW	44.5	50	60	70	90	105
Heating capacity		kW	48.7	54.3	64	75.4	96.2	113.2
Energy control		%	0,33,66,100	0,30,70,100	0,50,100	0,50,100	0,33,66,100	0,33,66,100
Power supply			380V / 3Ph / 50HZ					
Cooling power input		kW	17	19.5	22.8	26.7	32.9	39.7
Heating power input		kW	15.6	18	21	24.8	30.4	36.7
Start current		A	168	186	175	199	197	266
Working current in cooling		A	31.7	35.6	39.9	48.3	61	70.6
Working current in heating		A	29.9	33.5	37.5	45.4	57.3	66.3
Throttle methods			Thermal expansion valve					
Circuits			1					
Refrigerant			R410A					
Comp.	Type		Scroll type					
	Qty		2	2	2	2	3	3
Condensor side								
Condensor	Type		Al+copper tube					
Axial fan	Qty		1	1	1	1	2	2
	Drive		Direct drive					
	Motor power	kW	1.1	1.5	1.5	2.2	2X1.1	2X1.5
	Air flow	m^3 /h	16500	21000	21000	27000	33000	42000
Evaporator side								
Evaporator	Type		Al+copper tube					
Centrifugal fan	Qty		1	1	1	1	1	1
	Motor power	kW	3	3	4	4	5.5	5.5
	Air flow	m^3 /h	7600	8500	10900	12500	16000	19500
	Drive		Belt drive					
External static pressure（Pa）			250	250	300	300	300	300
Filter			Aluminum frame filter G3					
Noise level dB(A)			73	73	73	75	74	75
Refrigerant charge（kg）			4.3+6.2	4.3+8.5	2x7.5	2x8.5	3x7.5	3x8.5
Dimension	L	mm	2268	2268	2298	2298	2878	2878
	W	mm	1440	1440	1650	1650	2140	2270
	H	mm	1167	1167	1400	1400	1964	1964
Weight		kg	750	770	830	860	1160	1350

TECHNICAL DATA R410a

Model			RTU-120	RTU-140	RTU-150	RTU-190	RTU-210	RTU-300
Cooling capacity		kW	120	140	149	185	210	298
Heating capacity		kW	128.3	150	159.2	196.5	226	318
Energy control		%	0,25,50,75,100		0,50,100	0,16.6,33.3,50,66.4,83,100		0,25,50,75,100
Power supply			380V / 3Ph / 50HZ					
Cooling power input		kW	45.1	55.7	55.1	69.9	83	106.7
Heating power input		kW	41.7	51.8	51.5	64.8	77	100
Start current		A	218	252	323	232	301	415
Working current in cooling		A	82.4	101.4	100.2	130.9	151	192.3
Working current in heating		A	77.4	95.7	95.1	123.5	142.3	184.3
Throttle methods			Thermal expansion valve					
Circuits			4	4	2	6	6	4
Refrigerant			R410A					
Comp.	Type		Scroll type					
	Qty		4	4	2	6	6	4
Condensor side								
Condensor	Type		Al+copper tube					
Axial fan	Qty		2	2	2	4	4	4
	Drive		Direct drive					
	Motor power	kW	2X1.5	2x2.2	2x2.2	4X1.1	4X1.5	4x2.2
	Air flow	m^3 /h	42000	54000	54000	66000	84000	108000
Evaporator side								
Evaporator	Type		Al+copper tube					
Centrifugal fan	Qty		1	1	1	1	1	1
	Motor power	kW	7.5	11	11	15	15	18.5
	Air flow	m^3 /h	21000	25000	26000	32000	38000	54000
	Drive		Belt drive					
External static pressure（Pa）			400	400		500	500	500
Filter			Aluminum frame filter G3					
Noise level dB(A)			75	79	79	80	80	82
Refrigerant charge（kg）			4x7.5	4x8.5	2x17	6x7.5	6x8.5	4x14
Dimension	L	mm	3626	3626	3626	4690	4690	5660
	W	mm	2200	2200	2200	2330	2330	2330
	H	mm	2047	2047	2047	2055	2055	2055
Weight		kg	1710	1820	1850	2180	2430	2860

* Performance values refer to the following conditions:
Cooling: room air temperature 27.0°C DB RH 50%, ambient air temperature 35°C;
Heating: room air temperature 21.0°C DB, ambient air temperature 7°C DB / 6°C WB.

** Noise level measured by adopting average value in the noise lab with background noise of 25 dB (A), at a distance of 1.5m high fan speed.

OVERALL DIMENSIONS

Model RTU-12~ 18

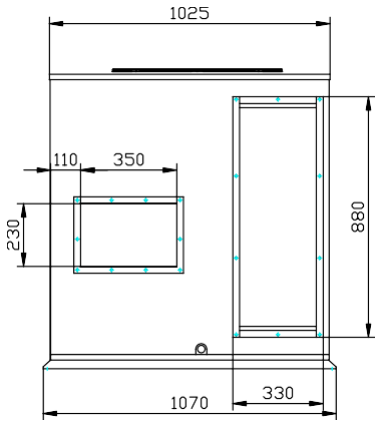

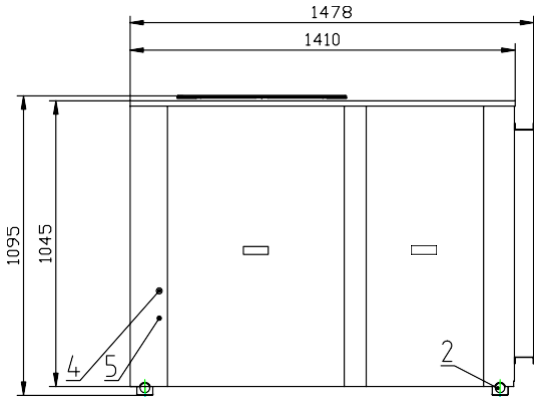

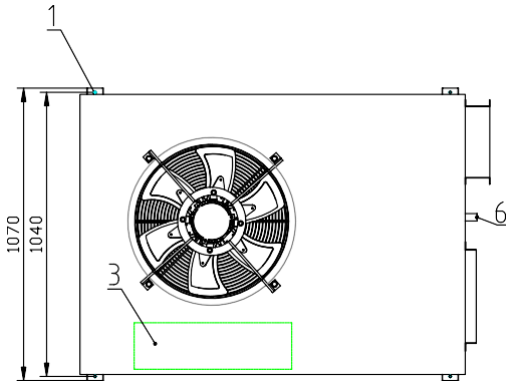

Model RTU-24~ 36

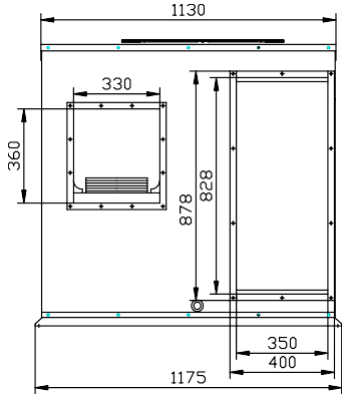

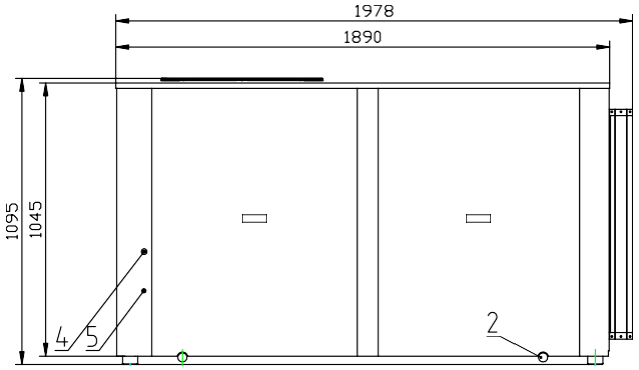

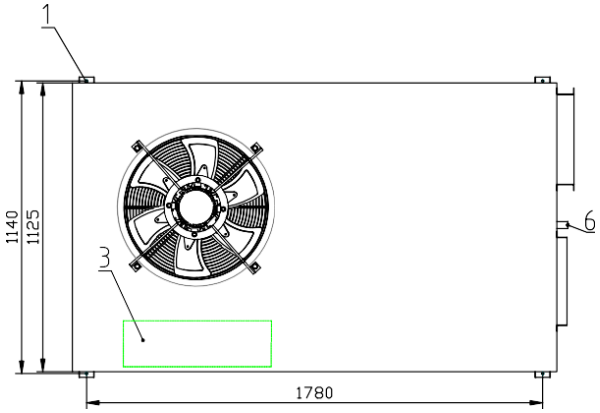

Model RTU-48~ 50

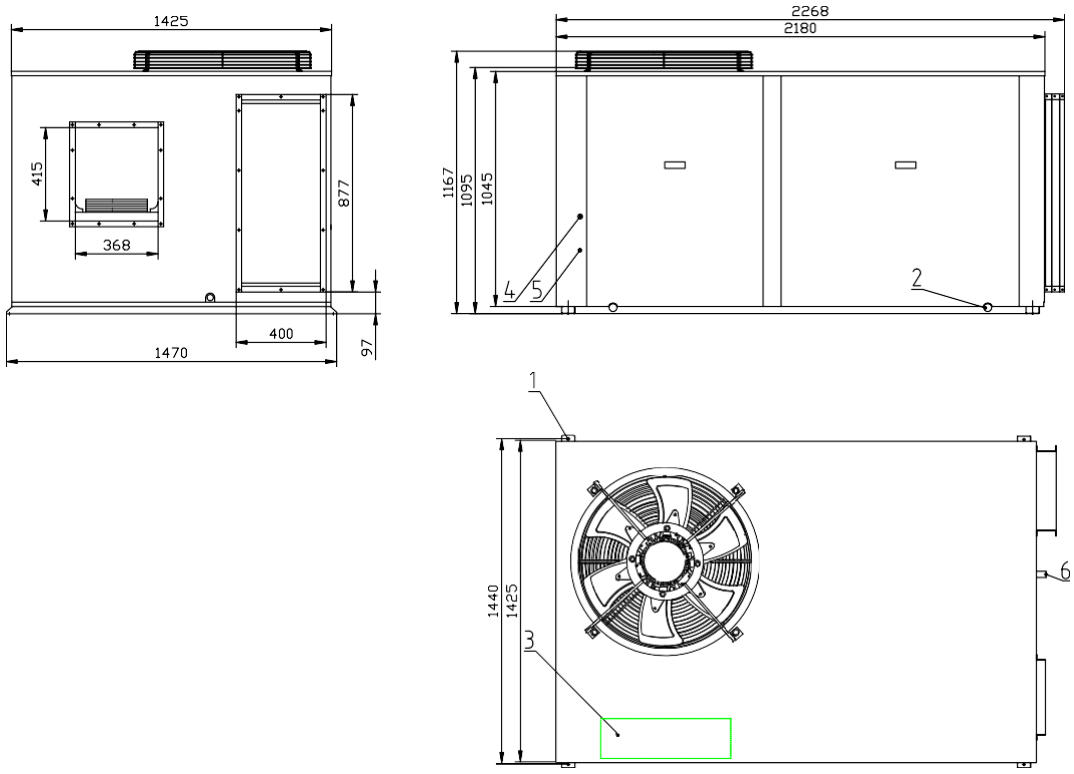

Model RTU-60~ 72

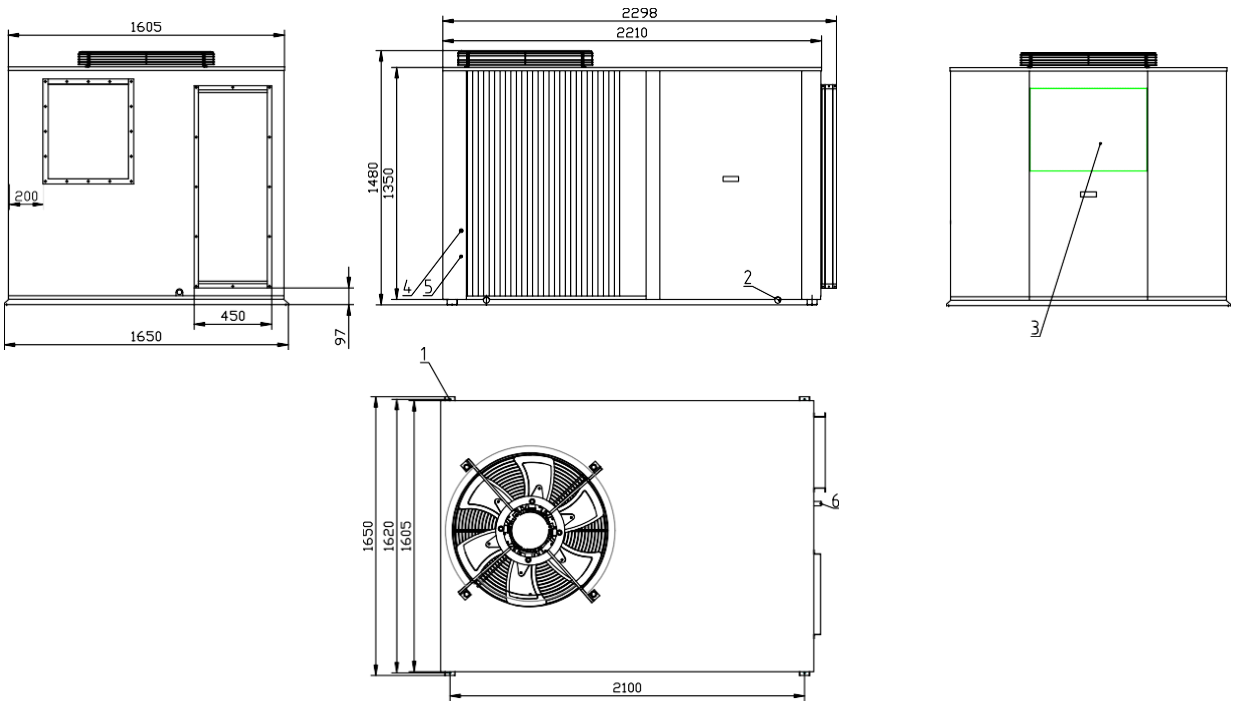

Model RTU-90~ 105

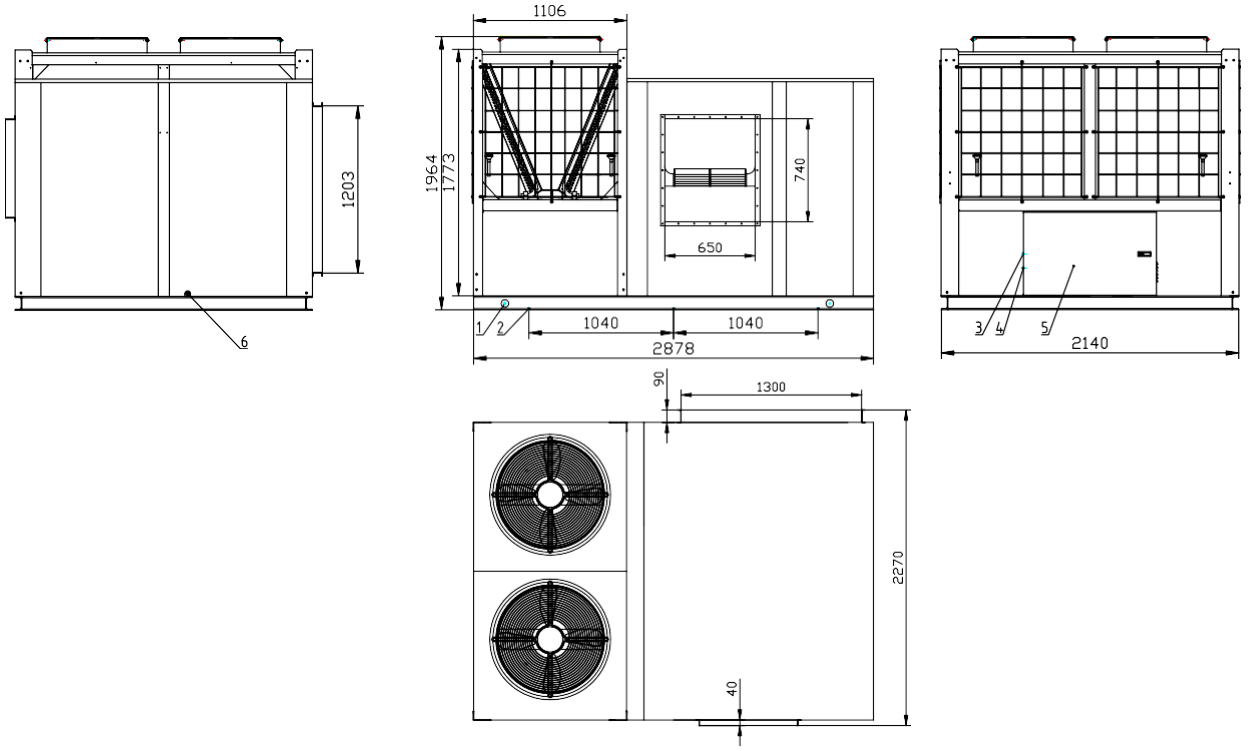

Model RTU-120~ 150

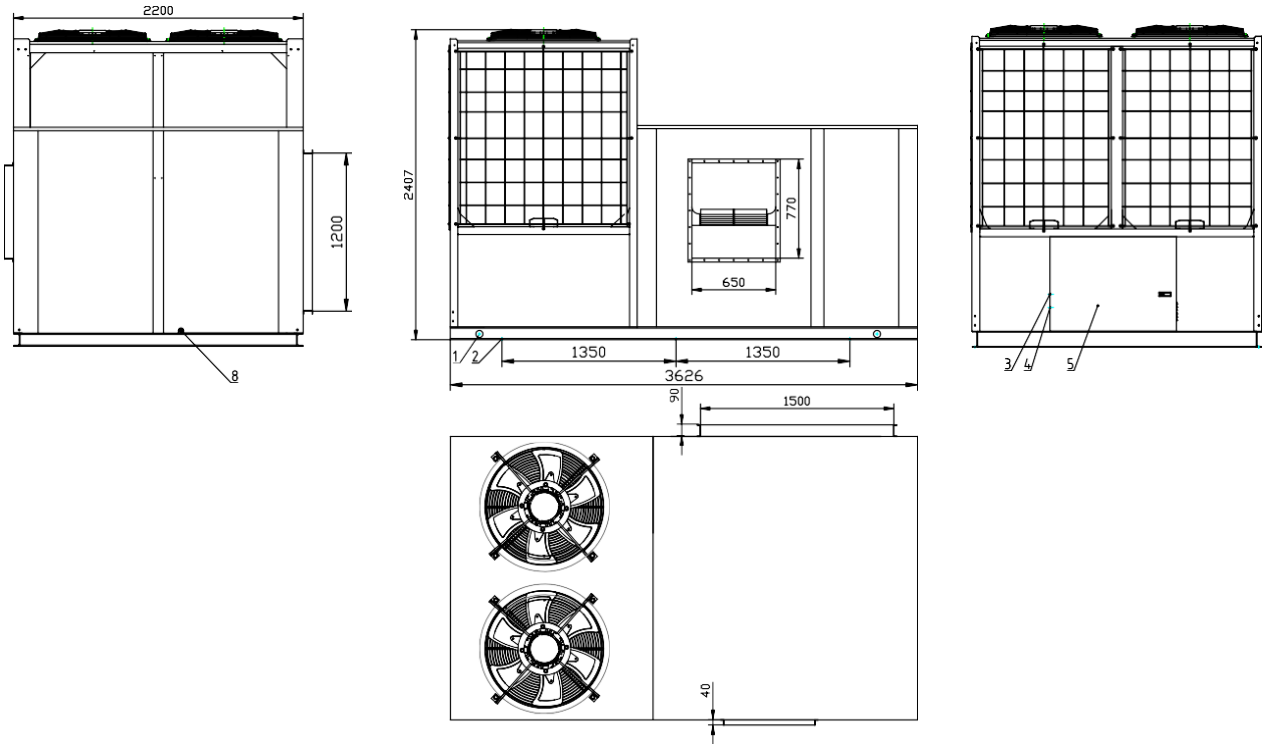

Model RTU-190~ 210

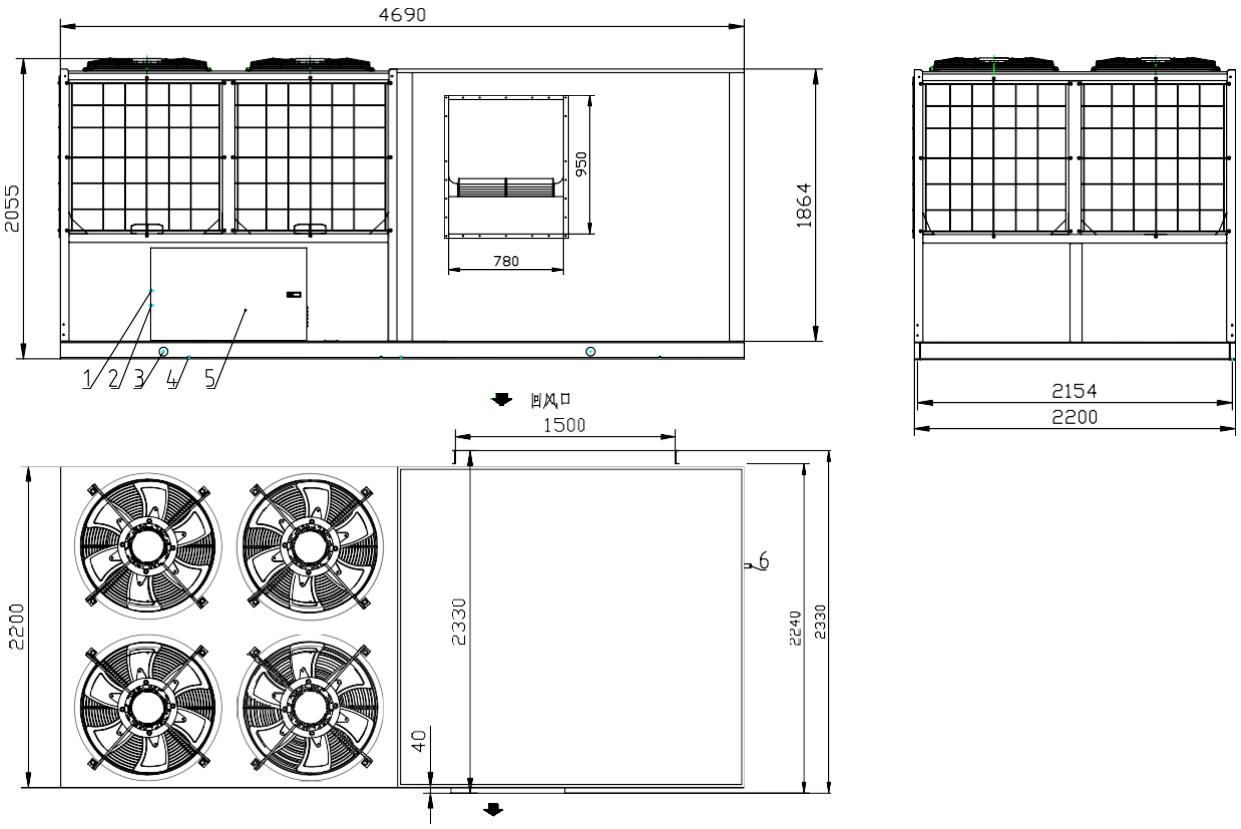

Model RTU-300

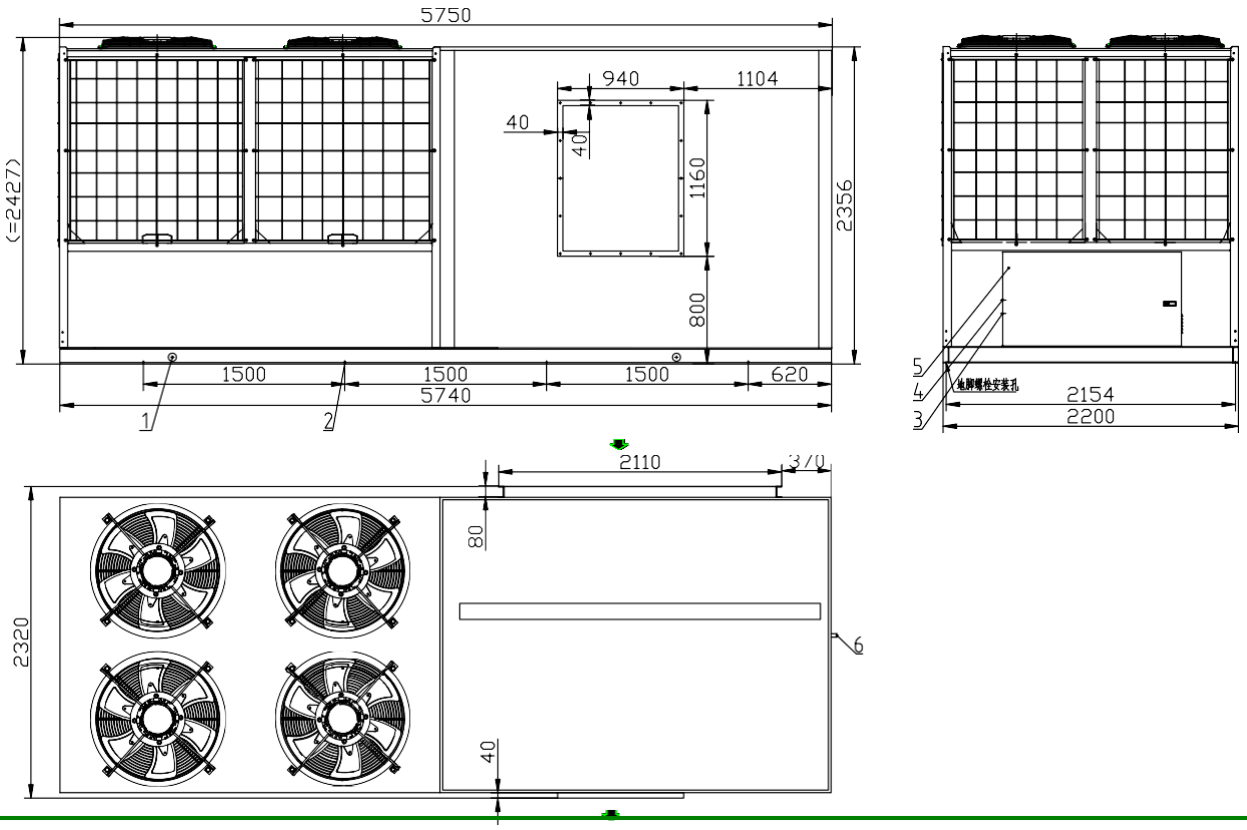

The technical data in this document are changing according to our new design. We reserve the right to make whatever modifications if it is necessary to improve the product at any time.

CloverVent AS
Addr.: Hystadvegen 55, 5416 Stord, Norway
Tel: +47 99008730 E-mail: hans.ingvar@clovervent.no
Fax: - Website: http://www.clovervent.no